LOCAL AREA TRAFFIC MANAGEMENT

DAVID COLLINS DR, ENDEAVOUR HILLS

EXAMPLE TREATMENT

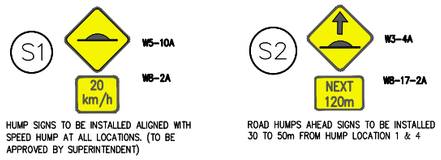

HUMP SIGNS TO BE INSTALLED ALIGNED WITH SPEED HUMP AT ALL LOCATIONS. (TO BE APPROVED BY SUPERINTENDENT)

ROAD HUMPS AHEAD SIGNS TO BE INSTALLED 30 TO 50m FROM HUMP LOCATION 1 & 4

SIGNAGE LEGEND

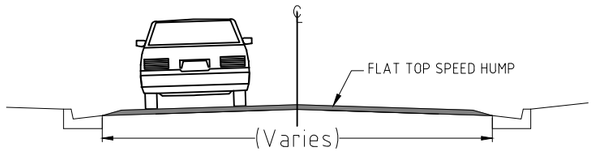

TYPICAL CROSS SECTIONS
NOT TO SCALE

SHEET INDEX

R-----C01	GENERAL NOTS, FACE SHEET & LOCALITY PLAN
R-----C02	GENERAL NOTS, FACE SHEET & LOCALITY PLAN
R-----C03	TYPICAL DETAILS
R-----C04	LAYOUT PLAN
R-----C05	LAYOUT PLAN

NOTES:

1. ALL DIMENSIONS IN METRES (UNLESS NOTED OTHERWISE)
2. SET-OUT IS TO LIP OF KERB (UNLESS NOTED OTHERWISE)
3. ALL TBM AND TRAVERSE LINE SETOUT CO-ORDINATES ARE TO GDA94. LEVELS TO AHD
4. ALL WORK WITHIN ROAD RESERVE IS TO BE PERFORMED IN ACCORDANCE WITH AS 1742.3
5. ALL PIT LIDS, VALVE COVERS, ETC WITHIN THE WORK AREA ARE TO BE ADJUSTED TO SUIT THE NEW LEVELS
6. ALL SERVICE AUTHORITIES TO BE NOTIFIED AND RELEVANT PERMITS RECEIVED PRIOR TO THE COMMENCEMENT OF ANY WORKS
7. ALL SIGNS AND ROAD FURNITURE AFFECTED BY WORKS ARE TO BE REMOVED & REINSTATE FOLLOWING COMPLETION OF CONSTRUCTION WORKS
8. ALL AREAS SURROUNDING WORKS TO BE TRIMMED/INFILLED TO MATCH FINISHED SURFACE LEVELS
9. ALL SERVICES TO BE PROVEN ON SITE BY CONTRACTOR PRIOR TO COMMENCEMENT OF WORKS
10. ALL ROAD CONSTRUCTION MATERIALS TO BE IN ACCORDANCE WITH THE SPECIFICATION
11. ALL PUBLIC LIGHTING WORKS BY OTHERS

WARNING
THE LOCATION OF EXISTING UNDERGROUND SERVICES SHOWN ON THESE PLANS ARE APPROXIMATE, THEIR EXACT POSITION MAY VARY FROM THAT SHOWN.
THE CONTRACTOR SHALL PROVE THE LOCATION OF ALL SERVICES PRIOR TO THE COMMENCEMENT OF WORKS AND REPORT DISCREPANCIES TO THE SUPERINTENDENT.

DIAL BEFORE YOU DIG
www.1100.com.au

LOCALITY PLAN

FLAT TOP HUMP LOCATIONS

City of Casey

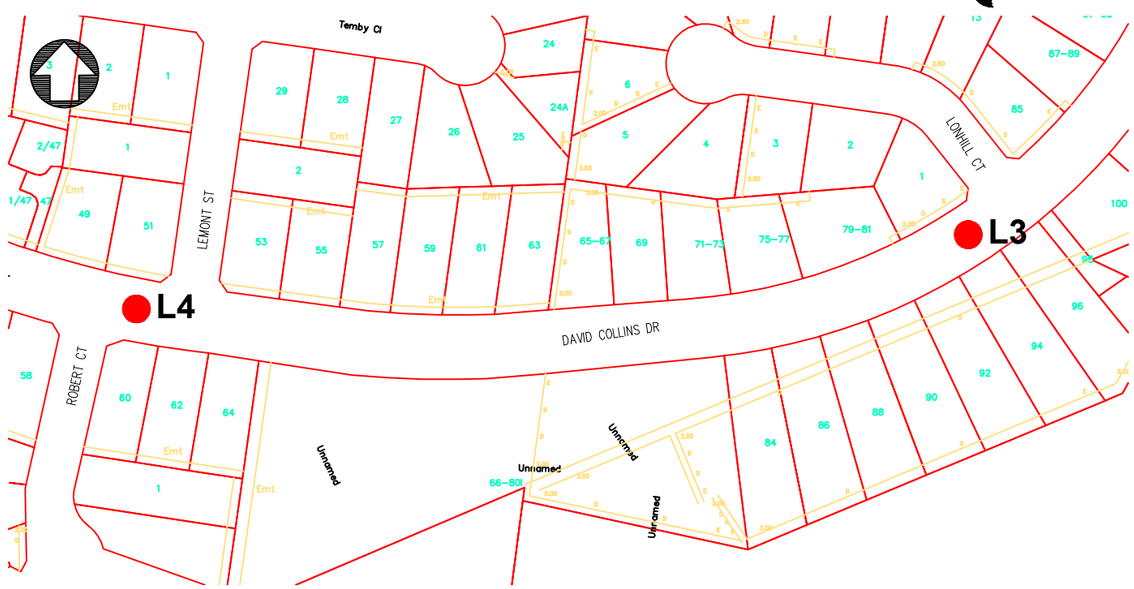

LEGEND

PROPOSED DRAINAGE	GAS MAIN G	FIRE PLUG	SEWER MANHOLE	GRAVEL DRIVE	PSM
PROPOSED DRAINAGE PITS	WATER MAIN W	STOP VALVE	TELEPHONE PIT	CONCRETE DRIVE	TITLE PEG
EXISTING DRAINAGE	TELEPHONE U/G T	FIRE HYDRANT	TELEPHONE POLE	THICKENED PATH	NATURAL SURFACE
EXISTING DRAINAGE PITS	POWER U/G E	POWER POLE	TELEPHONE BOX	TREE	HOUSE NO.
PROPOSED KERB AND CHANNEL	POWER OVERHEAD E(OH) E(OH)	LIGHT POLE	GAS VALVE	TREE REMOVAL	LOT/LP NO. 65
EXISTING KERB AND CHANNEL	SEWER MAIN S	POWER PIT	HOUSE DRAIN --H--	TREE STUMP	PIT NO.

AMENDMENTS

DATE	REMARKS	REV	APP

DATUM: A.H.D.	SCALE: 1 :
COORD. SYS.:	
SURVEY	JOB NO.
DESIGN IH	DWG.FILENAME
CHECKED	REG. FILE NO.
CERTIFIED	MELWAY REF.
BRIEF NO.	CONTRACT NO.

CITY OF CASEY
DAVID COLLINS DR, ENDEAVOUR HILLS
PROPOSED FLAT TOP SPEED HUMP
GENERAL NOTS, FACE SHEET & LOCALITY PLAN
SHEET 1 OF 2

MANAGER ENGINEERING & ENVIRONMENTAL SERVICES
DATE: 18.02.2019
R---- C1 REVISION -
SHEET 1 OF 5

PLOTTED: 05 March, 2019 - 1:22 PM G:\Design\Scoped Projects, Referrals & Tech. Advice\50348 David Collins Dr Flattop\ David Collins Dr Rev A.dwg

LOCAL AREA TRAFFIC MANAGEMENT

DAVID COLLINS DR, ENDEAVOUR HILLS

LOCALITY PLAN

FLAT TOP HUMP LOCATIONS

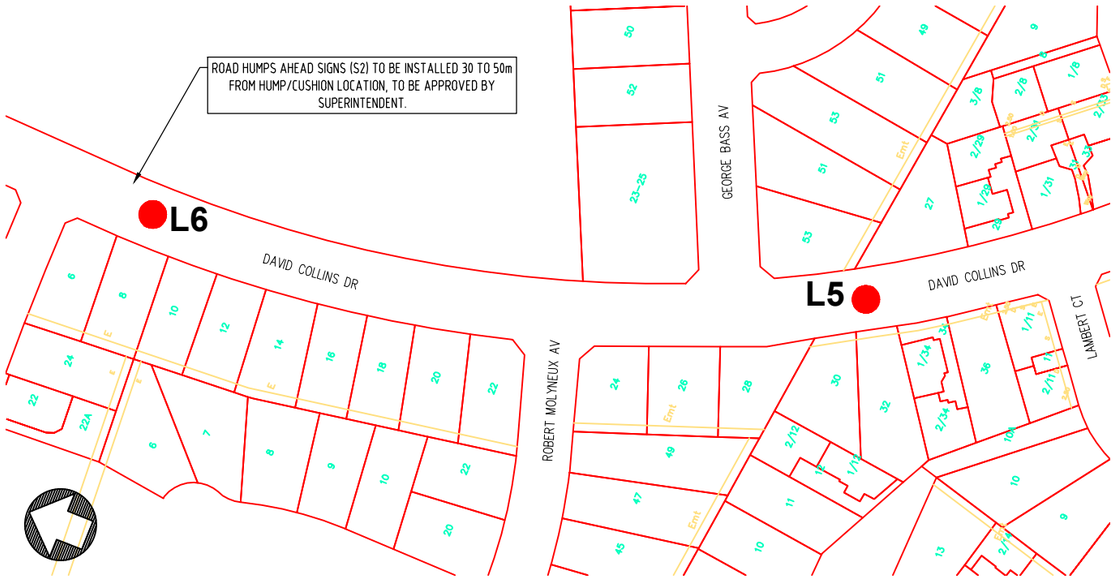

LEGEND

PROPOSED DRAINAGE	GAS MAIN —G—	FIRE PLUG	SEWER MANHOLE	GRAVEL DRIVE	PSM		
PROPOSED DRAINAGE PITS	WATER MAIN —W—	STOP VALVE	TELEPHONE PIT	CONCRETE DRIVE	TITLE PEG		
EXISTING DRAINAGE	TELEPHONE U/G —T—	FIRE HYDRANT	TELEPHONE POLE	THICKENED PATH	NATURAL SURFACE		
EXISTING DRAINAGE PITS	POWER U/G —E—	POWER POLE	TELEPHONE BOX	TREE	HOUSE NO.	26	
PROPOSED KERB AND CHANNEL	POWER OVERHEAD —E(OH)— E(OH)—	LIGHT POLE	GAS VALVE	TREE REMOVAL	LOT/LP NO.	65	
EXISTING KERB AND CHANNEL	SEWER MAIN —S—	POWER PIT	HOUSE DRAIN —H—	TREE STUMP	PIT NO.	S2	

AMENDMENTS

DATE	REMARKS	REV	APP

DATUM: A.H.D.	SCALE: 1 :
COORD. SYS.:	
SURVEY	JOB NO.
DESIGN IH	DWG.FILENAME
CHECKED	REG. FILE NO.
CERTIFIED	MELWAY REF.
BRIEF NO.	CONTRACT NO.

CITY OF CASEY

DAVID COLLINS DR, ENDEAVOUR HILLS
PROPOSED FLAT TOP SPEED HUMP
GENERAL NOTS, FACE SHEET & LOCALITY PLAN
SHEET 2 OF 2

MANAGER ENGINEERING & ENVIRONMENTAL SERVICES
DATE: 18.02.2019
R---- REVISION
C1 -
SHEET 2 OF 5

PLOTTED: 05 March, 2019 - 1:23 PM G:\Design\Scoped Projects, Referrals & Tech. Advice\50348 David Collins Dr Flattop\ David Collins Dr Rev A.dwg

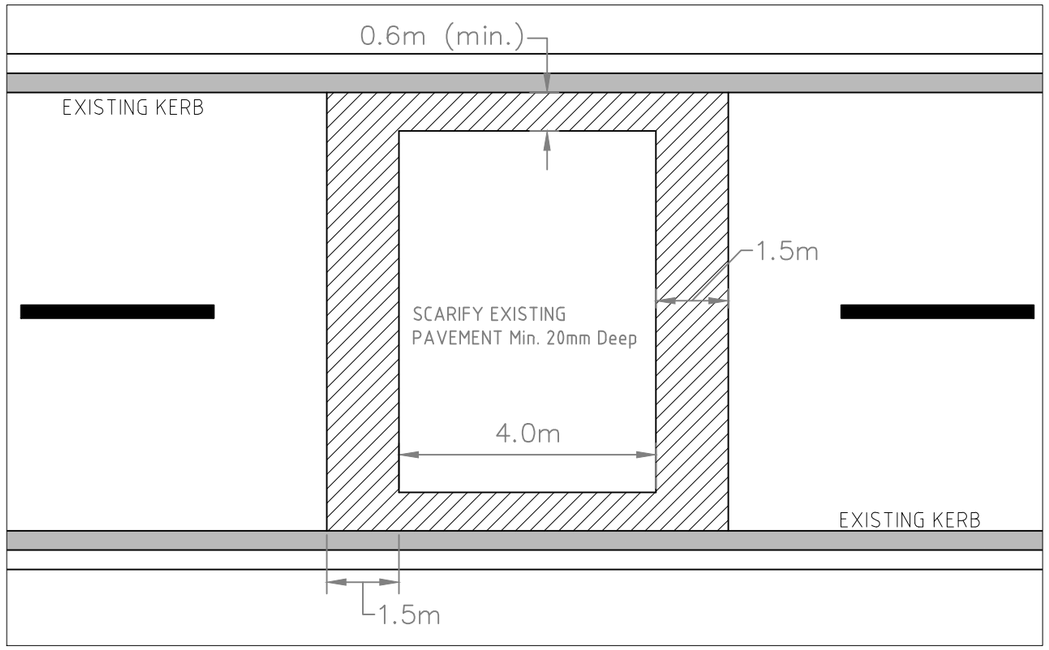

DEMOLITION

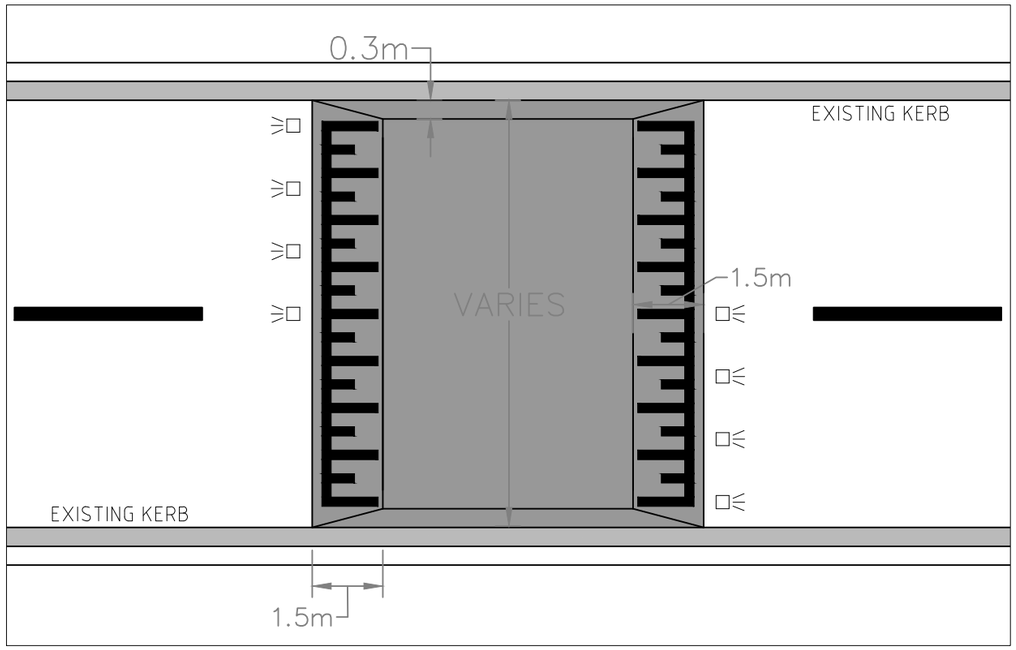

TYPICAL DETAIL

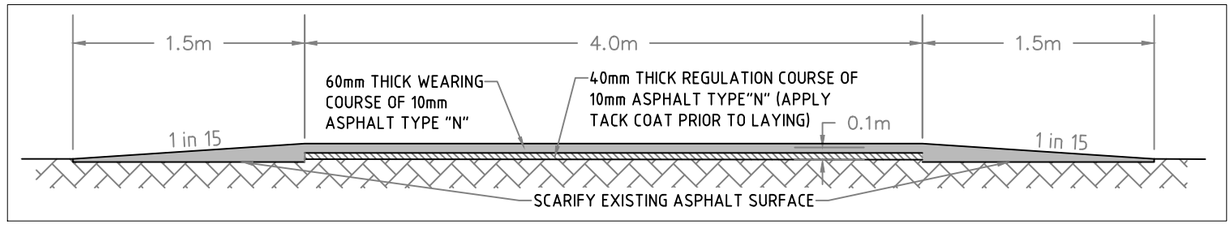

SECTION A-A 1:15 APPROACH

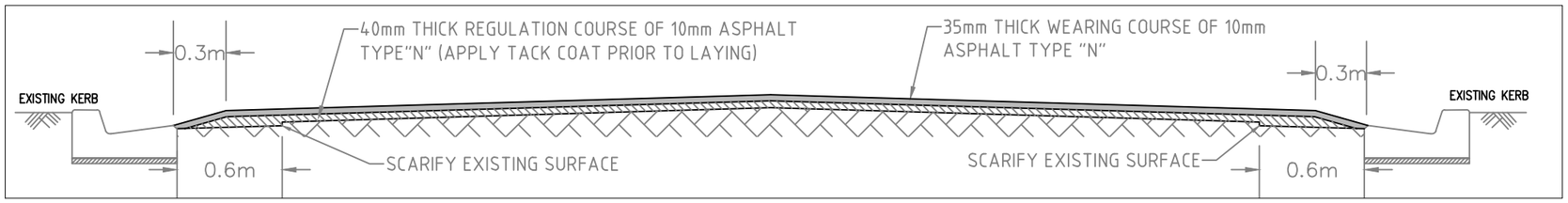

SECTION B-B

DIAL BEFORE YOU DIG
www.1100.com.au

WARNING
THE LOCATION OF EXISTING UNDERGROUND SERVICES SHOWN ON THESE PLANS ARE APPROXIMATE. THEIR EXACT POSITION MAY VARY FROM THAT SHOWN. THE CONTRACTOR SHALL PROVE THE LOCATION OF ALL SERVICES PRIOR TO THE COMMENCEMENT OF WORKS AND REPORT DISCREPANCIES TO THE SUPERINTENDENT.

FOR DISCUSSION

City of Casey

LEGEND

PROPOSED DRAINAGE		GAS MAIN	G	FIRE PLUG		SEWER MANHOLE		GRAVEL DRIVE		PSM	
PROPOSED DRAINAGE PITS		WATER MAIN	W	STOP VALVE		TELEPHONE PIT		CONCRETE DRIVE		TITLE PEG	
EXISTING DRAINAGE		TELEPHONE U/G	T	FIRE HYDRANT		TELEPHONE POLE		THICKENED PATH		NATURAL SURFACE	+
EXISTING DRAINAGE PITS		POWER U/G	E	POWER POLE		TELEPHONE BOX	T	TREE		HOUSE NO.	26
PROPOSED KERB AND CHANNEL		POWER OVERHEAD	E(OH) E(OH)	LIGHT POLE		GAS VALVE		TREE REMOVAL		LOT/LP NO.	65
EXISTING KERB AND CHANNEL		SEWER MAIN	S	POWER PIT		HOUSE DRAIN	H	TREE STUMP		PIT NO.	5.2

AMENDMENTS

DATE	REMARKS	REV	APP

DATUM: A.H.D.

COORD. SYS.:

SCALE: 1 :

SURVEY	JOB NO.
DESIGN IH	DWG.FILENAME
CHECKED	REG. FILE NO.
CERTIFIED	MELWAY REF.
BRIEF NO.	CONTRACT NO.

CITY OF CASEY

DAVID COLLINS DR, ENDEAVOUR HILLS
PROPOSED FLAT TOP SPEED HUMP
TYPICAL DETAIL
SHEET 1 OF 1

MANAGER ENGINEERING & ENVIRONMENTAL SERVICES
DATE: 18.02.2019
R---- REVISION -
C1
SHEET 3 OF 5

PLOTTED: 05 March, 2019 - 1:23 PM G:\Design\Scoped Projects, Referrals & Tech. Advice\59348 David Collins Dr Flattop\ David Collins Dr Rev A.dwg

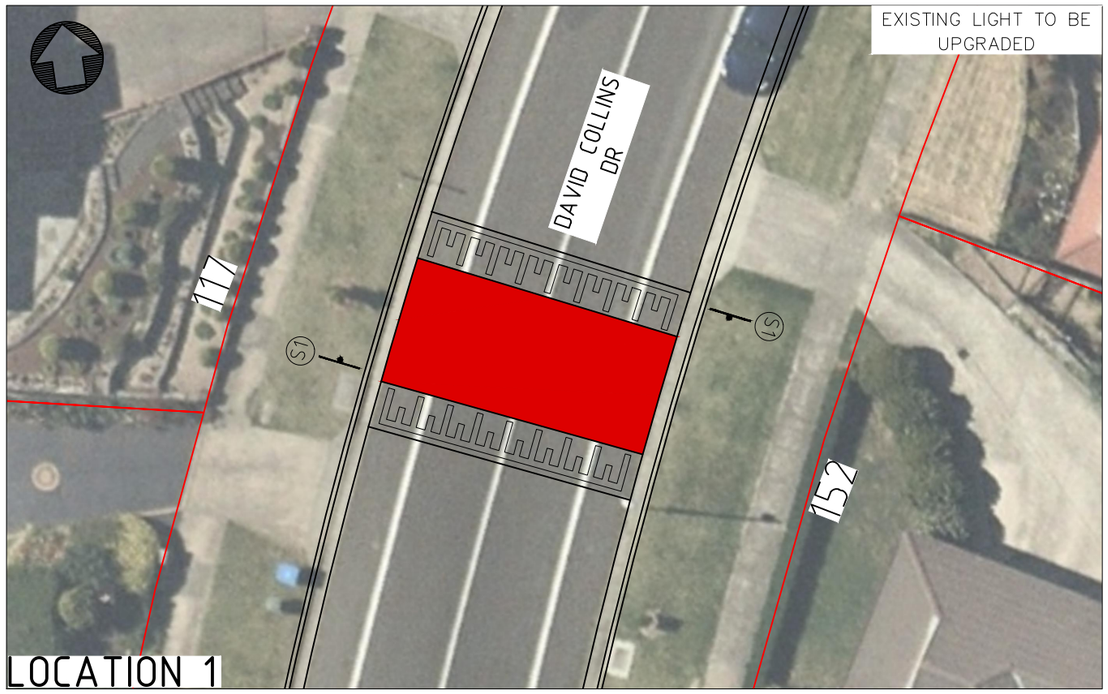

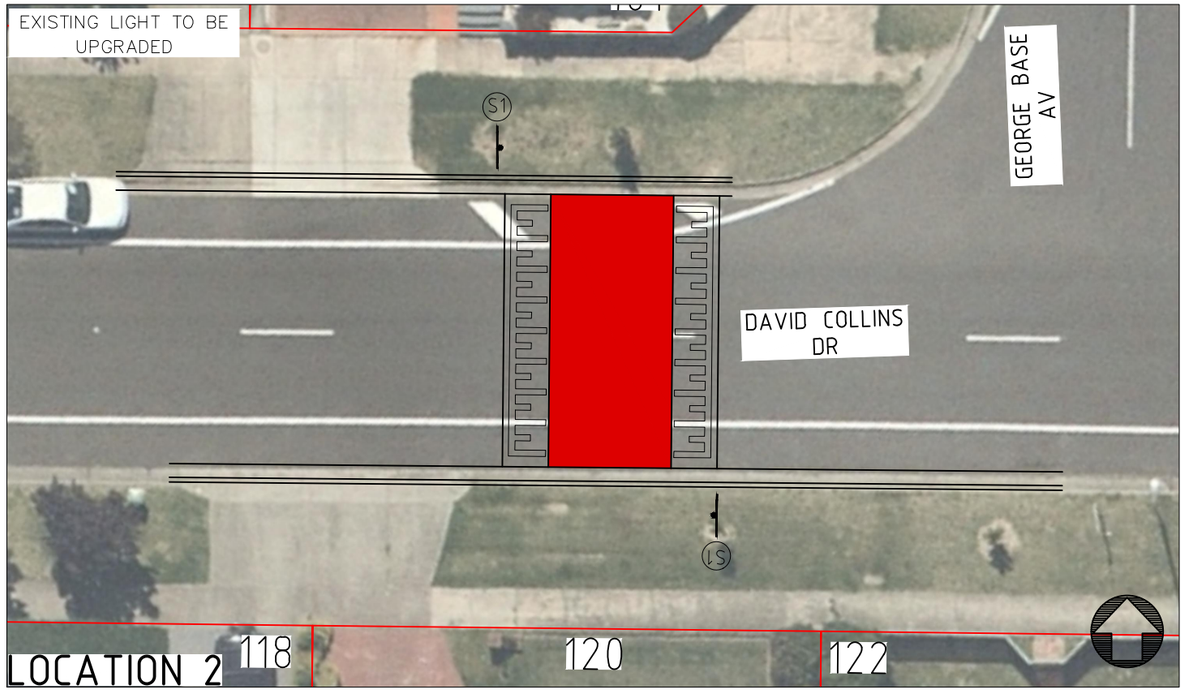

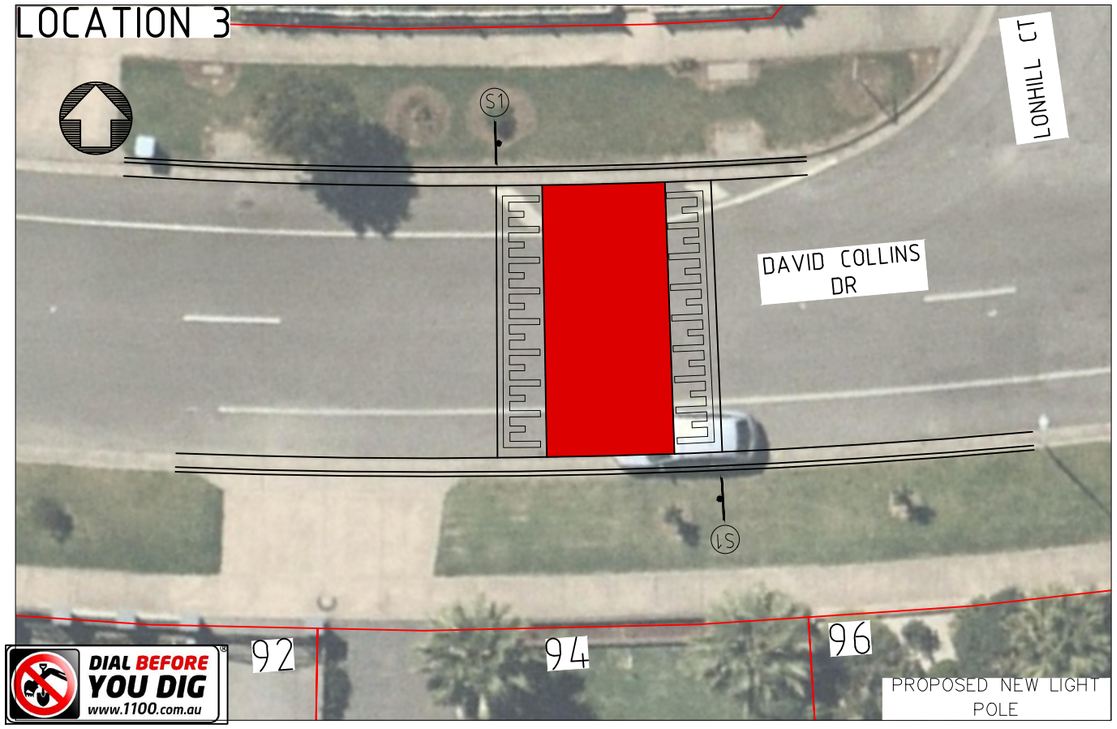

DIAL BEFORE YOU DIG
www.1100.com.au

WARNING
THE LOCATION OF EXISTING UNDERGROUND SERVICES SHOWN ON THESE PLANS ARE APPROXIMATE. THEIR EXACT POSITION MAY VARY FROM THAT SHOWN. THE CONTRACTOR SHALL PROVE THE LOCATION OF ALL SERVICES PRIOR TO THE COMMENCEMENT OF WORKS AND REPORT DISCREPANCIES TO THE SUPERINTENDENT.

0 1020
Metres

FOR DISCUSSION

City of Casey

LEGEND

PROPOSED DRAINAGE		GAS MAIN	G	FIRE PLUG		SEWER MANHOLE		GRAVEL DRIVE	PSM
PROPOSED DRAINAGE PITS		WATER MAIN	W	STOP VALVE		TELEPHONE PIT		CONCRETE DRIVE	TITLE PEG
EXISTING DRAINAGE		TELEPHONE U/G	T	FIRE HYDRANT		TELEPHONE POLE		THICKENED PATH	NATURAL SURFACE
EXISTING DRAINAGE PITS		POWER U/G	E	POWER POLE		TELEPHONE BOX	T	TREE	HOUSE NO. 25
PROPOSED KERB AND CHANNEL		POWER OVERHEAD	E(OH) E(OH)	LIGHT POLE		GAS VALVE		TREE REMOVAL	LOT/LP NO. 65
EXISTING KERB AND CHANNEL		SEWER MAIN	S	POWER PIT		HOUSE DRAIN	H	TREE STUMP	PIT NO. 32

AMENDMENTS

DATE	REMARKS	REV	APP

DATUM: A.H.D.
COORD. SYS.:
SCALE: 1 :
SURVEY
DESIGN IH
CHECKED
CERTIFIED
BRIEF NO.
JOB NO.
DWG.FILENAME
REG. FILE NO.
MELWAY REF.
CONTRACT NO.

CITY OF CASEY

DAVID COLLINS DR, ENDEAVOUR HILLS
PROPOSED FLAT TOP SPEED HUMP
LAYOUT PLAN
SHEET 1 OF 2

MANAGER ENGINEERING & ENVIRONMENTAL SERVICES
DATE: 18.02.2019
R---- REVISION -
C1
SHEET 4 OF 5

PLOTTED: 05 March, 2019 - 1:23 PM
G:\Design\Scoped Projects, Referrals & Tech. Advice\50348 David Collins Dr Flattop\ David Collins Dr Rev A.dwg

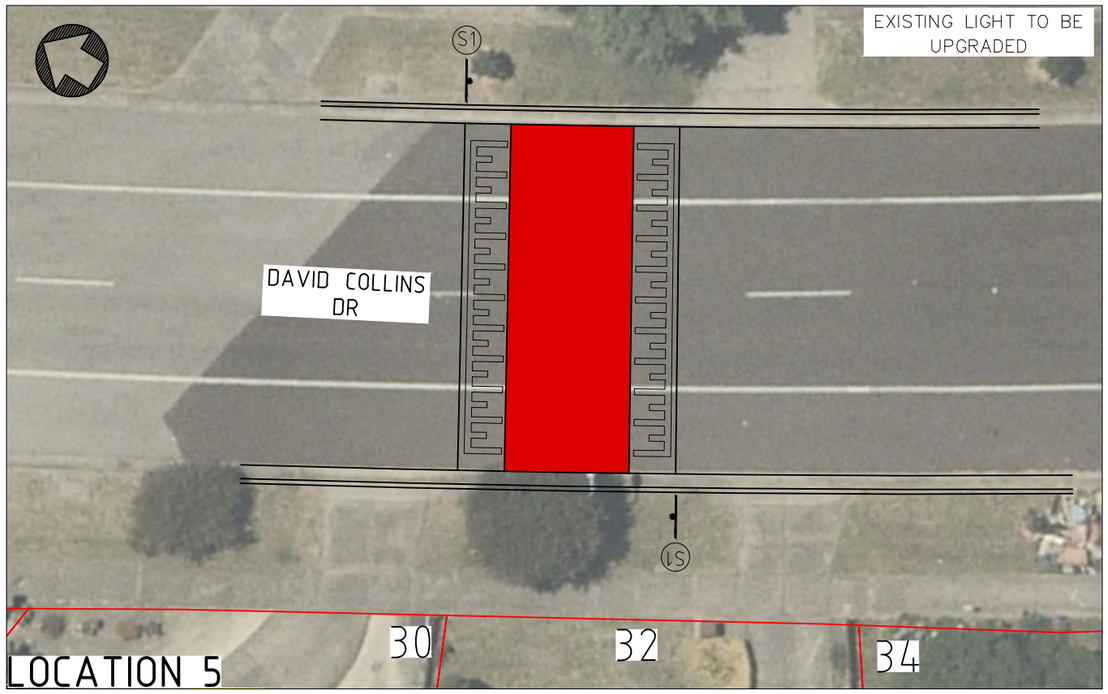

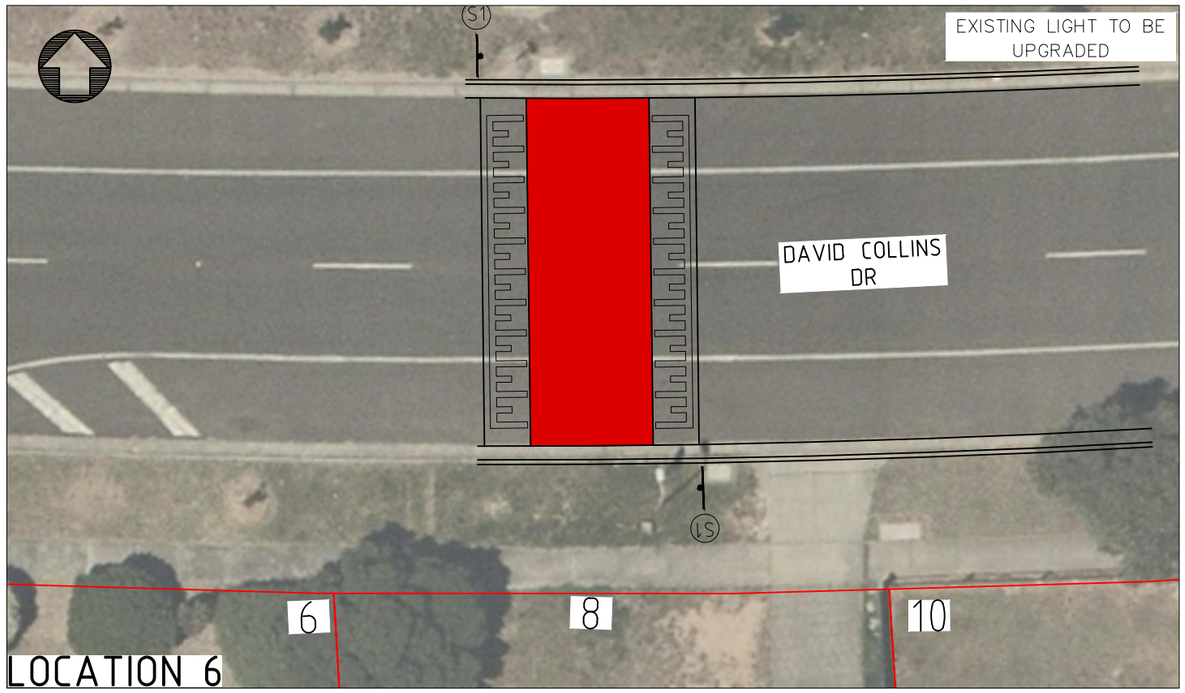

DIAL BEFORE YOU DIG
www.1100.com.au

WARNING
THE LOCATION OF EXISTING UNDERGROUND SERVICES SHOWN ON THESE PLANS ARE APPROXIMATE. THEIR EXACT POSITION MAY VARY FROM THAT SHOWN. THE CONTRACTOR SHALL PROVE THE LOCATION OF ALL SERVICES PRIOR TO THE COMMENCEMENT OF WORKS AND REPORT DISCREPANCIES TO THE SUPERINTENDENT.

0 10 20 Metres

FOR DISCUSSION

City of Casey

LEGEND

PROPOSED DRAINAGE	GAS MAIN —G—	FIRE PLUG	SEWER MANHOLE	GRAVEL DRIVE	PSM				
PROPOSED DRAINAGE PITS	WATER MAIN —W—	STOP VALVE	TELEPHONE PIT	CONCRETE DRIVE	TITLE PEG				
EXISTING DRAINAGE	TELEPHONE U/G —T—	FIRE HYDRANT	TELEPHONE POLE	THICKENED PATH	NATURAL SURFACE				
EXISTING DRAINAGE PITS	POWER U/G —E—	POWER POLE	TELEPHONE BOX	TREE	HOUSE NO. 26				
PROPOSED KERB AND CHANNEL	POWER OVERHEAD —E(OH)— E(OH)—	LIGHT POLE	GAS VALVE	TREE REMOVAL	LOT/LP NO. 65				
EXISTING KERB AND CHANNEL	SEWER MAIN —S—	POWER PIT	HOUSE DRAIN —H—	TREE STUMP	PIT NO. 5.2				

AMENDMENTS

DATE	REMARKS	REV	APP

DATUM: A.H.D.
COORD. SYS.:
SURVEY
DESIGN IH
CHECKED
CERTIFIED
BRIEF NO.

SCALE: 1 :
JOB NO.
DWG.FILENAME
REG. FILE NO.
MELWAY REF.
CONTRACT NO.

CITY OF CASEY

DAVID COLLINS DR, ENDEAVOUR HILLS
PROPOSED FLAT TOP SPEED HUMP
LAYOUT PLAN
SHEET 2 OF 2

MANAGER ENGINEERING & ENVIRONMENTAL SERVICES
DATE: 18.02.2019
R---- REVISION
C1 -
SHEET 5 OF 5

PLOTTED: 05 March, 2019 - 1:23 PM G:\Design\Scoped Projects, Referrals & Tech. Advice\50348 David Collins Dr Flattop\ David Collins Dr Rev A.dwg